Air & Allied Sales (Pacific) Pty Ltd

23 Precision Street
Salisbury QLD 4107

+617 3272 7999
sales@air-allied.com.au

1" BSP FILTER/REG/LUBRICATOR KIT(FRL)AUT

Brand: Norgren **Product Code: BL68-1-KIT2**

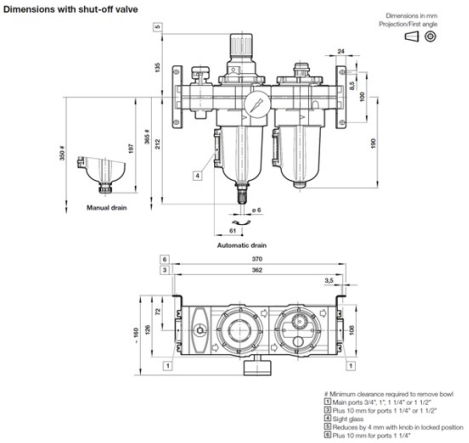

1" BSP FILTER/REG/LUBRICATOR KIT(FRL)AUT

Olympian Plus 1" BSP (FRL) Filter, Regulator (automatic drain), Lubricator Set is complete with 40µm filter element, pressure gauge, exhausting shut-off valve, Metal bowls and mounting bracket - Ready to "Plug & Play" !

This is a complete quality air processing unit, pre-assembled ready to install, with a massive 371 cfm of air flow.
Pressure range: 0.4 to 8 Bar (5 to 116 psi)

This unit has a manual drain and you can order an MANUAL DRAIN version (for the FR Unit) if required see part# BL68-1-KIT1

* Olympian Plus plug-in system
* Complete air processing unit pre-assembled, ready to install
* High efficiency water removal
* Non-rising adjusting knob has snap-action lock
* Quick release bowls
* Medium: Compressed air
* Bowl Material: Aluminium alloy

Specifications

Bowl	Metal
Inlet	1" BSP Female
Max. Supply Pressure	17 Bar
Outlet	1" BSP Female

www.air-allied.com.au
Data contained in this document is copyright of Air & Allied (Pacific) Sales Pty Ltd, and as such cannot be reproduced or redistributed, in part or whole, without the expressed permission of Air & Allied (Pacific) Sales Pty Ltd. Errors and Omissions Excepted.